Partdrawing for DA3000R - *ANGLE DRILL 10MM 240V

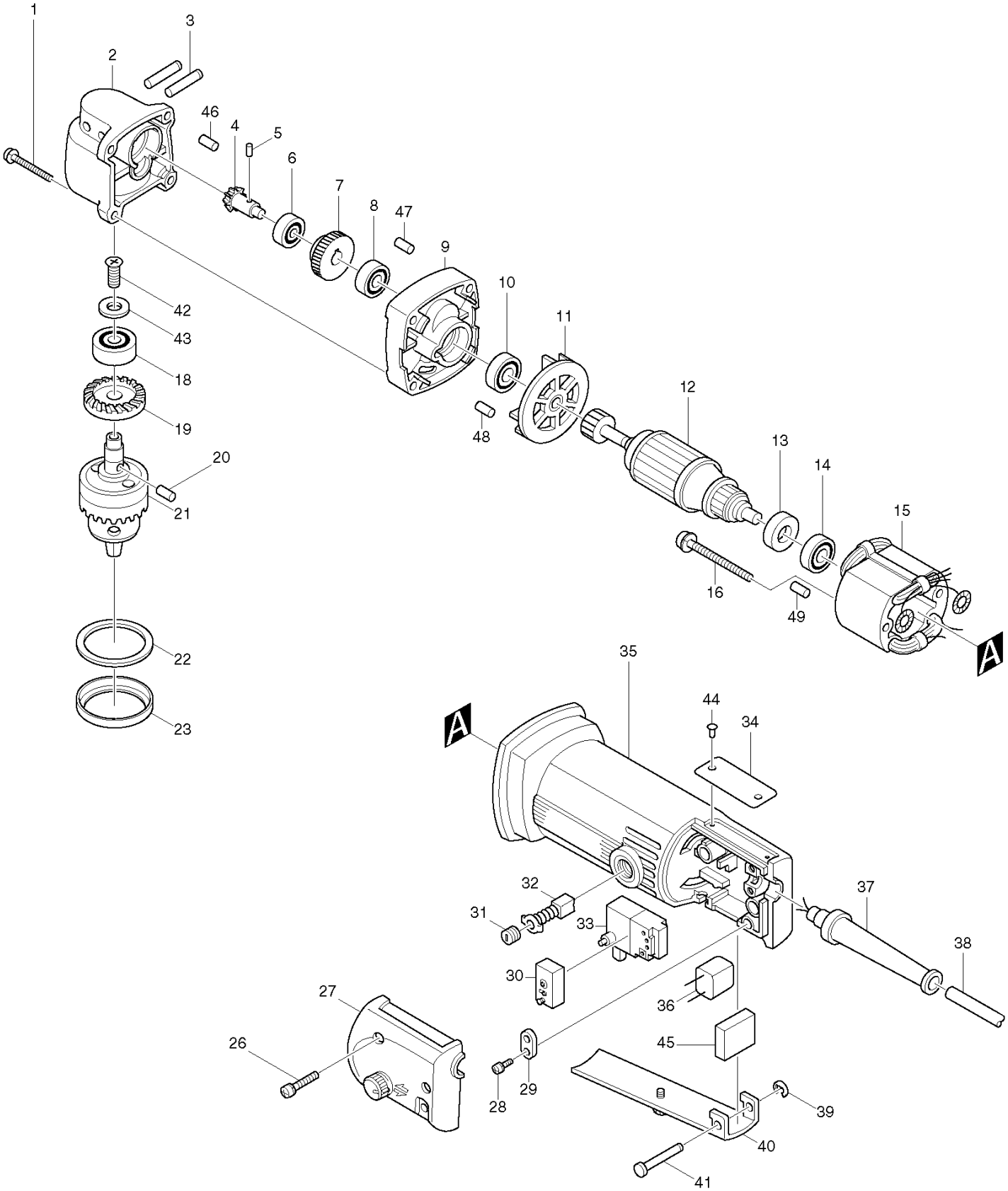

Partdrawing for DA3000R - *ANGLE DRILL 10MM 240V

No.	Part no.	Name
27	155612-5	SWITCH COVER COMPLETE DA3000R
9	156951-6	'GEAR HOUSING COVER DA3000
43	253969-9	*BLUE WASHER 4 W.C/SUNK 5PK
5	256014-9	*ROLLER 3-5 DA3000 5PK
20	256023-8	*PIN 5 DA3000
41	256626-8	PIN 4 JN1600/JS1600
3	256745-0	ROLL PIN 4-36 -NEW- DA3000
35	157722-4	'MOTOR HOUSING DA3000R
40	158016-0	SWITCH LEVER DA3000R
2	159272-5	GEAR HOUSING -NEW- DA3000
8	211014-6	BALL BEARING 606
14	211028-5	BALL BEARING 627LB/HP1641/903
10	211033-2	BALL BEARING 608LB 9217SPC/904
6	211051-0	BALL BEARING 609LLB BUC121/122
18	211051-0	BALL BEARING 609LLB BUC121/122
13	681614-0	INSULATION WASHER 627/N1923BD/
37	682500-8	CORD GUARD 906/JN1600/JS1600
23	286216-3	CAP 46 DA3000
33	651936-2	SWITCH SGEB108CV-1P 110V DA300
33	651937-0	SWITCH SGEB106CV-1P 240V DA300
46	263002-9	RUBBER PIN 4 PC5000/UH5580/TD
47	263002-9	RUBBER PIN 4 PC5000/UH5580/TD
48	263002-9	RUBBER PIN 4 PC5000/UH5580/TD
49	263002-9	RUBBER PIN 4 PC5000/UH5580/TD
12	511821-0	ARMATURE ASSY 110V DA3000R
12	511824-4	ARMATURE ASSY 240V DA3000R
31	643550-8	BRUSH HOLDER CAP CB-9-14-17/N1
34	854740-0	NAME PLATE DA3000R
28	911133-5	*PAN HD SCREW M4X18 10PK
1	911161-0	*PAN HD SCREW 4X35 W/SP 10PK
26	911168-6	*PAN HD SCREW 4X40 W/CP 10PK
7	221682-7	HELICAL GEAR 32 DA3000
16	266147-2	*PT SCREW 4X55 4306/4334D 5PK
22	443049-1	FELT RING 38 DA3000
21	193442-6	DRILL CHUCK SET DA3000R
42	251304-5	*COUNTERSUNK HEAD SCRW 10PK
29	687001-1	STRAIN RELIEF 4157KB/6820V
39	961017-7	*EXT E-RING JIS JE-3 10PK
32	191628-6	CARBON BRUSH CB-65
36	645253-0	NOISE SUPPRESSOR 110V
30	650527-6	SWITCH 890/K598 DA3000 REVERSE
4	226751-9	SPIRAL BEVEL GEAR 7 DA3000R
19	226752-7	SPIRAL BEVEL GEAR 24 DA3000R
44	953106-2	*RIVET 0-5 10PK
15	527063-6	FIELD ASS'Y 115V
38	663906-9	POWER SUPPLY CORD 1.0-2-2.0
15	527062-8	FIELD ASS'Y 240V
38	692006-8	POWER SUPPLY CORD 1.0-2-2.0

11	241822-1	FAN 58