# Partdrawing for 6797DZ - *SCREWDRIVER 9.6V 6.35 HEX

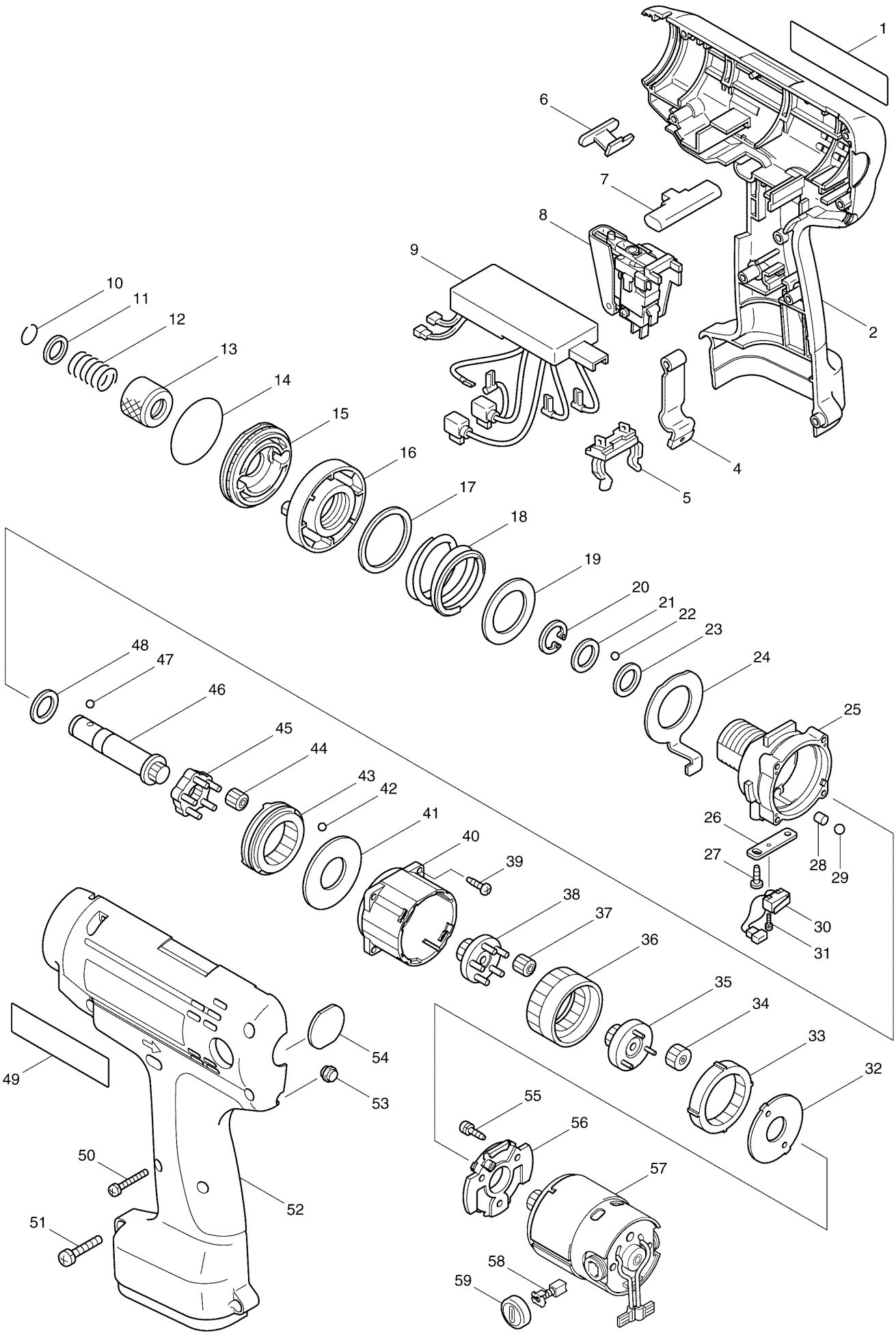

# Partdrawing for 6797DZ - *SCREWDRIVER 9.6V 6.35 HEX

| No. | Part no. | Name |
|---|---|---|
| 37 | 226311-7 | 'SPUR GEAR 10 6796-98D/FD |
| 44 | 226311-7 | 'SPUR GEAR 10 6796-98D/FD |
| 34 | 226351-5 | 'SPUR GEAR 17 6796-98D/FD |
| 33 | 226352-3 | 'INTERNAL GEAR 49 6796-98D/FD |
| 43 | 227014-6 | 'INTERNAL GEAR 35 6796-98D/FD |
| 36 | 227015-4 | 'INTERNAL GEAR 35 6796-98D/FD |
| 55 | 911006-2 | *PAN HD SCREW M3X8 10PK |
| 50 | 265095-2 | *P H SCREW M3X27 BTD042 5PK |
| 31 | 265114-4 | PAN HD SCREW M2.3x10 |
| 51 | 265145-3 | P HD SCREW M4X22 BFL300/400 |
| 49 | 819064-1 | MAKITA LABEL LS1030/5603R/2414 |
| 8 | 651999-8 | SWITCH C3D-5 6796-98D/DZ |
| 2 | 183321-6 | HOUSING SET 6796D/97D/98D/FD |
| 52 | 183321-6 | HOUSING SET 6796D/97D/98D/FD |
| 20 | 961072-9 | *EXT INVERTED CIRCLIP-12 5PK |
| 4 | 344798-2 | SET PLATE 6704D/6795D/2400/B |
| 26 | 344968-3 | 'HOLDER PLATE 6796-98D/FD |
| 24 | 344969-1 | TORQUE UP PLATE 6796-98D/FD |
| 54 | 345171-9 | 'LENZ 6797D/FD |
| 39 | 265893-4 | 'TAPPING SCREW 3X12 6796D/FD |
| 27 | 266007-8 | *PT SCREW 3X10 TRIBULAR 10PK |
| 6 | 413088-5 | 'INNER PLATE 6796D/97D/98D |
| 10 | 231965-7 | RING SPRING 10 TD0101F/DF010 |
| 57 | 629790-2 | *MOTOR 6796-98D/FD |
| 9 | 631437-6 | CONTROLLER 6796-98D/DZ |
| 11 | 267143-3 | FLAT WAHSER 11 TD0101F/6796D&F |
| 1 | 852962-6 | 'NAME PLATE 6797D |
| 12 | 233005-7 | *COMPRESSION SPRING 13 5PK |
| 58 | 191966-6 | CARBON BRUSH CB-424 6314DW |
| 18 | 233312-8 | COMPRESSION SPRING 6797D/FD |
| 56 | 416587-6 | MOTOR BRACKET 6796-98D/FD |
| 40 | 416588-4 | GEAR CASE A 6796-98D/FD |
| 53 | 416764-0 | 'LENZ 6796-98D/FD/BFT40-123 |
| 41 | 267225-1 | 'FLAT WASHER 18 6796-98D/FD |
| 32 | 267738-2 | 'LOCK WASHER 6796-98D/FD |
| 28 | 268068-4 | PIN 5 6796-98D/FD/LF1000 |
| 46 | 324136-4 | SPINDLE M 6796-98D/FD |
| 30 | 638083-6 | 'SWITCH UNIT 6796-98D/FD |
| 45 | 152526-9 | 'CARRIER COMP 6796-98D/FD |
| 35 | 152833-0 | 'SPUR GEAR 15 COMP 6796-98D/FD |
| 38 | 152834-8 | 'SPUR GEAR 15 COMP 6796-98D/FD |
| 25 | 152835-6 | GEAR CASE COMP 6796-98D/FD |
| 15 | 417510-4 | 'FRONT COVER 6796D/97D/98D & F |
| 7 | 417511-2 | 'F/R CHANGE LEVER 6796D-98D/FD |
| 16 | 417619-2 | 'SPRING HOLDER 6797D/FD |
| 14 | 213510-0 | O RING 36 AN510/HR2010/HM1202C |
| 29 | 216018-3 | *STEEL BALL 5.0 10PK |
| 22 | 216019-1 | *STEEL BALL 3 10PK |

# Partdrawing for 6797DZ - *SCREWDRIVER 9.6V 6.35 HEX

| | | |
|---|---|---|
| 42 | 216019-1 | *STEEL BALL 3 10PK |
| 47 | 216019-1 | *STEEL BALL 3 10PK |
| 21 | 253052-2 | *NARROW THIN WASHER 12 10PK |
| 23 | 253052-2 | *NARROW THIN WASHER 12 10PK |
| 48 | 253052-2 | *NARROW THIN WASHER 12 10PK |
| 19 | 253355-4 | 'THIN WASHER 30 6796-98D/FD |
| 17 | 253356-2 | 'THIN WASHER 30 6796-98D/FD |
| 5 | 643918-8 | BATTERY HOLDER LS800DWB/HR160D |
| 59 | 643933-2 | HOLDER CAP 6503DW/6314DW/6796D |
| 13 | 162218-2 | SLEEVE 6796D/97D/98D & BTW/BFT |